RD01: Typical Bracing for Standard Trusses

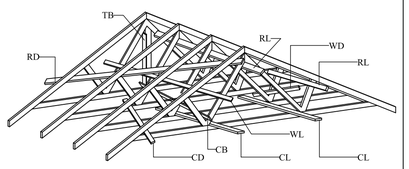

Truss Stability: trusses are to be maintained in their vertical plane with a system of longitudinal binders and diagonals to their rafters, ceiling joists and webs.

The following abbreviations have been used:

RL - Rafter Longitudinal Brace
CL - Ceiling Longitudinal Brace
CB - Chevron Brace
WL - Web Longitudinal Brace
RD - Rafter Diagonal Brace
CD - Ceiling Diagonal Brace
WD - Web Diagonal Brace
TB - Tee Brace

All bracing should be a minimum section of 22x97 unless noted otherwise and are to be nailed with 2 No 3.35mm diameter x 75mm long galvanised round wire nails to every trussed rafter they cross. Lap joints may be provided and the overlap is to be nailed to at least 2 trussed rafters.

Please consult truss plots of the individual roof trusses in order to determine where roof bracing is required. For reasons of clarity some longitudinal ties are indicated on truss profiles only; these must be installed together with bracing shown on the plan layout.

RD02: Longitudinal Brace

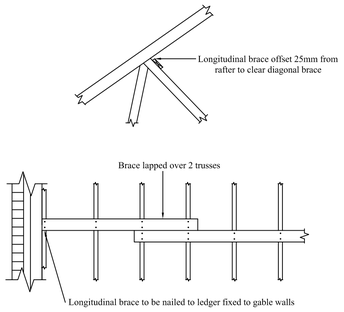

Longitudinal braces are to be fixed at each unsupported joint and extended the length of the roof and finishing tight against a party or gable wall. The brace should be as close as possible to the joint and the rafter joints fixed to the web to allow the rafter diagonal brace to run through - Nailed to every truss using 2 No 3.35mm x 75mm galvanised wire nails.

RD03: Diagonal Rafter Brace

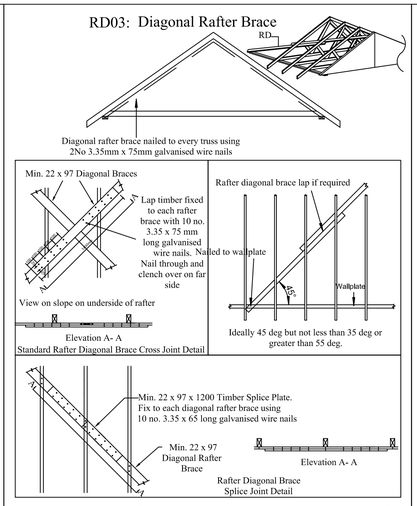

Rafter diagonal bracing is nailed to the underside of the minimum 3 rafters at an angle of approximately 45 deg and runs from the ridge to the wallplate to which it is fixed. It must extend over the whole length of the roof with a minimum of 4 braces used. It may be omitted from no more than 2 trusses between braces and one truss at gable or party wall.

RD04: Chevron Brace

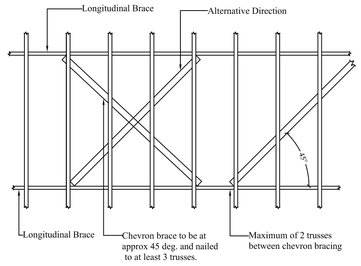

Web chevron bracing is needed to ensure stability on duopitch roof spans over 8m and monopitch roof spans over 5m span

Web chevron bracing is fixed to certain webs (as shown on truss profiles) at an angle of approximately 45 deg and must cover at least 3 trusses. It is continued along the whole length of the roof and may be omitted from 2 trusses between braces and one truss at a gable or party wall.

RD05: Stub & Cantilever Brace

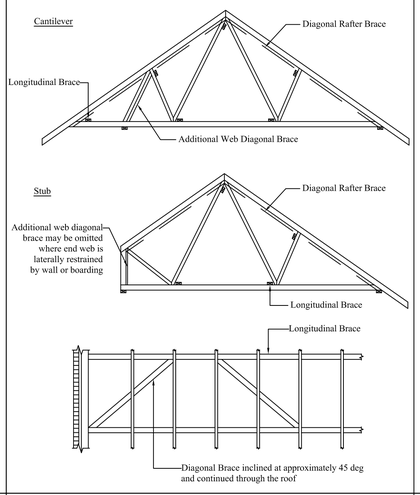

RD06: Alternative Attic and Raised Tie Brace (Using min. 22 x 97 sawn timber)

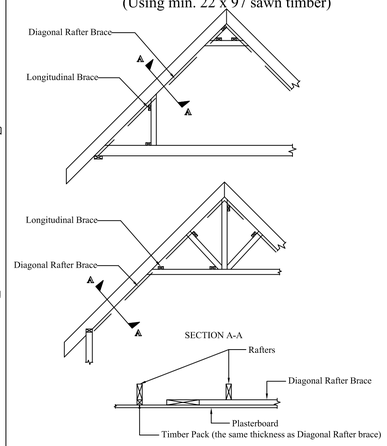

Install diagonal rafter brace as per detail R3
Pack the rafters to allow for plasterboard fixing.

RD07: Attic and Raised Tie Brace using OSB Diaphragms

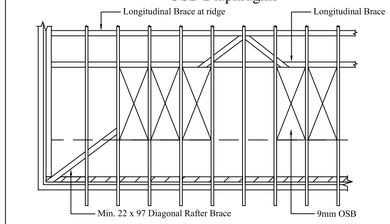

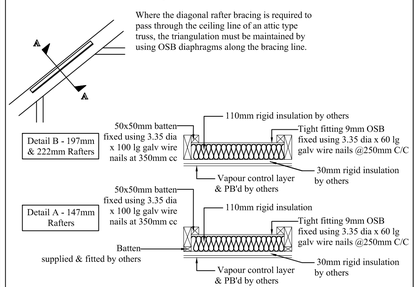

RD08: Web Diagonal Brace

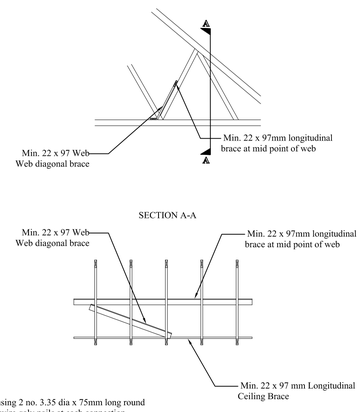

Fix using 2 no. 3.35 dia x 75mm long round wire galv nails at each connection.

Install web diagonal brace at each end of the web longitudinal brace & at every 6 metres max distance between.
For a run of less than 3 no. Trusses use the alternative 'I' brace detail.

RD09: Tee brace

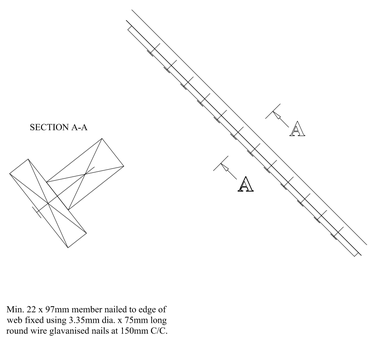

To be used to brace truss memebers when bracings cannot span over 3 trusses

RD10: Framing Around a Chimney

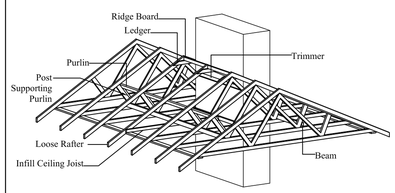

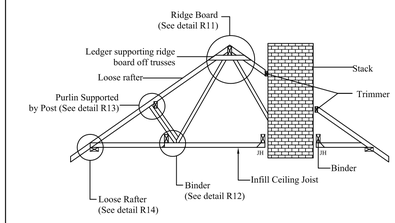

Note:
Keep All Timber 50mm Away from Stack.

RD11: Support System for Loose Ridge Board/Purlin

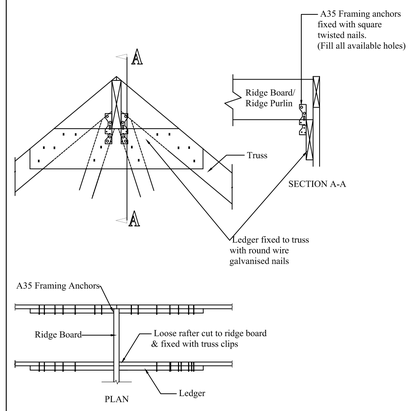

RD12: Support System for Infill Ceiling Joists

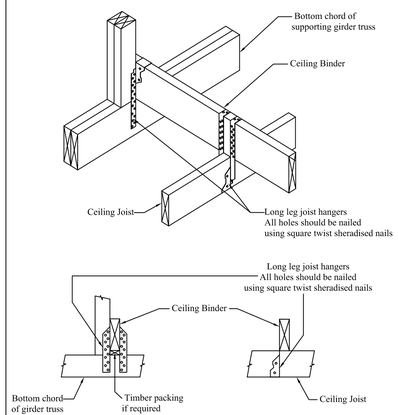

RD13: Support Purlin for Loose Rafter

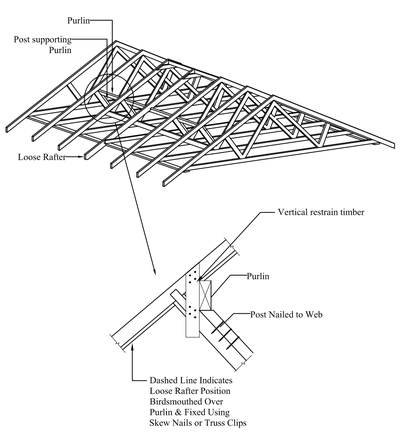

RD14: Wallplate Support for Loose Rafter

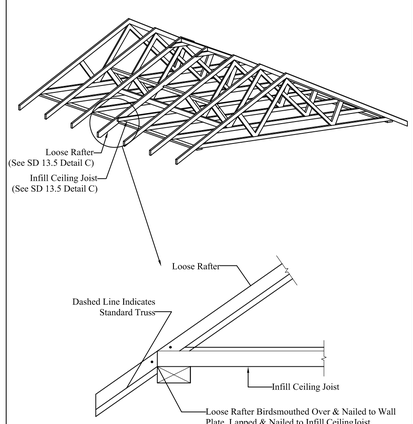

RD16: Fixing Single Ply Trusses to Wallplates

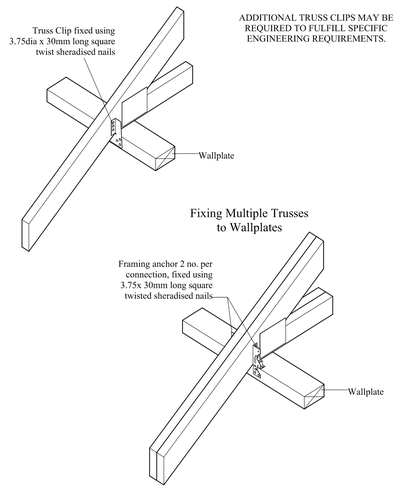

ADDITIONAL TRUSS CLIPS MAY BE REQUIRED TO FULFILL SPECIFIC ENGINEERING REQUIREMENTS.

RD17: Hipboard Connection at Truss Apex

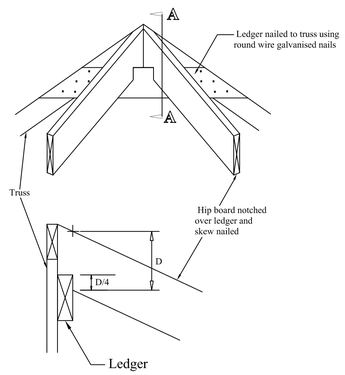

RD18: Cantilevered Infill Using Poleplate

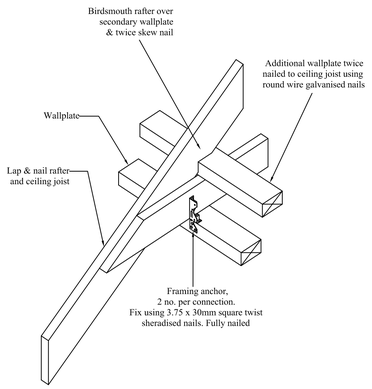

Rev	Description	Date

Drawing Status:

Construction

Title: Roof Standard Details

Drg No: Sheet 1

Client:

Site:

Scale at A1:	Date:	
NTS	12.06.09	
Drawn by:	Checked by:	Rev:
DJ		-

TAYLOR LANE ©
Chapel Road, Rotherwas Industrial Estate, Hereford HR2 6LD
Tel: 01432 271912 Fax: 01432 351064 www.taylor-lane.co.uk
General Design Office E-mail: design@taylor-lane.co.uk

RD19: Cantilevered Infill using Post

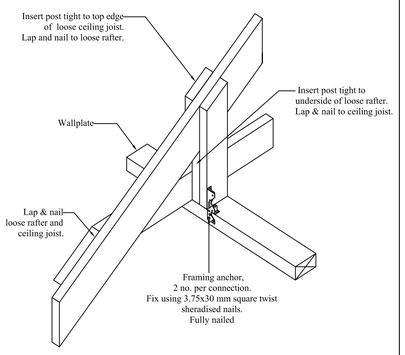

Engineers approval required each time detail is specified.

RD20: Large Cantilevered Infill

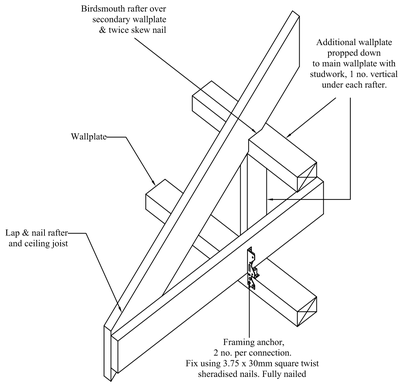

Engineers approval required each time detail is specified.

RD21: Cantilevered Hipboard

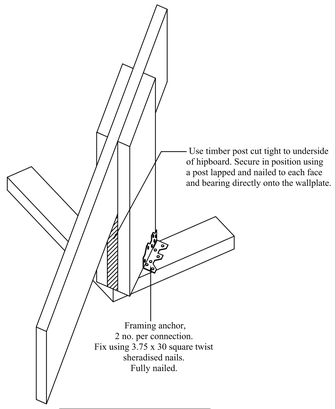

Engineers approval required each time detail is specified.

RD22: 230L Tank Stand

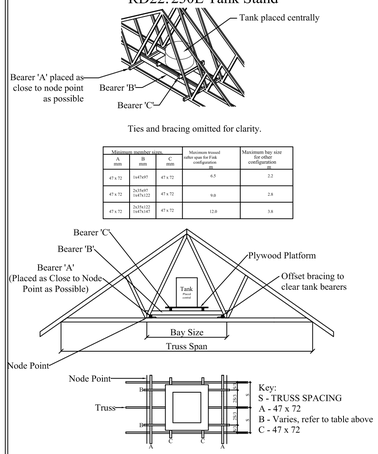

Minimum member sizes			Maximum tested rafter span for Fink configuration (B)	Maximum bay size for other configuration (B)
A mm	B mm	C mm		
47 x 72	1x47x97	47 x 72	6.5	2.2
47 x 72	2x24x97 1x47x122	47 x 72	9.0	2.8
47 x 72	2x24x122 1x47x147	47 x 72	12.0	3.8

Designed to Support Tank 230 Litres Max over 3 no. Trusses
Please Inform Taylor Lane if Tank is Larger & Specify Location

RD24: Valley Frame Fixing

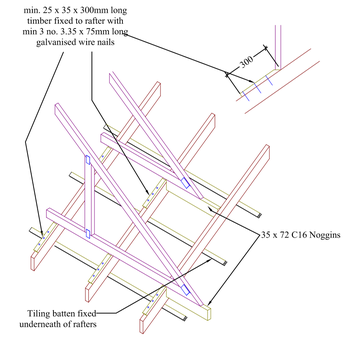

Note:
Valley sets to be braced accordingly - see profiles

RD25: Purlin End Support On Truss Without Vertical Web

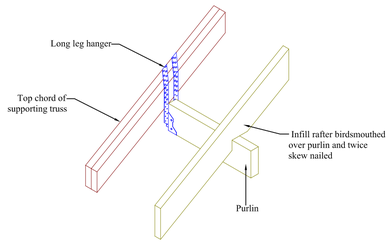

RD26: Purlin End Support On Truss With Vertical Web

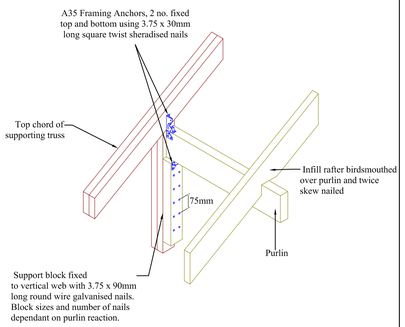

RD27: Truss fixing using Twisted Restraint Strap

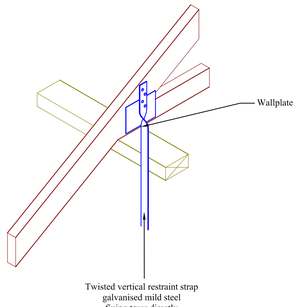

RD28: Roof Connection To Masonry Walls Using Horizontal Restraint Straps

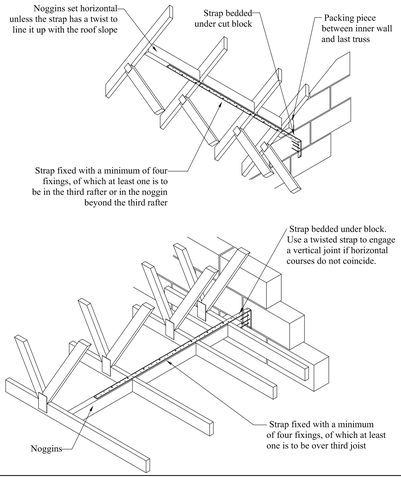

RD29: Cap and Base Truss Fixing Part 1

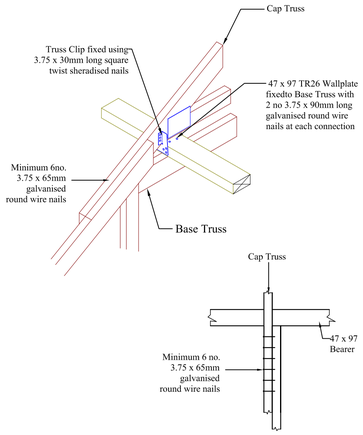

BASE TRUSSES SHOULD BE FULLY FIXED AND BRACED BEFORE CAP TRUSSES ARE FIXED INTO POSITION.

RD30: Hipboard Connection Over Girder

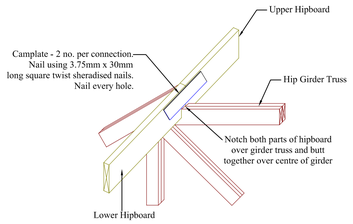

SECTION

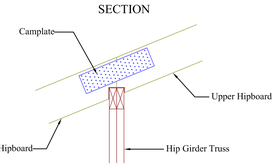

RD31: Standard Truss Connections

THA Girder Truss Shoe

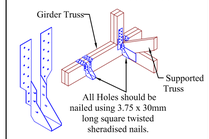

HUS Mono Truss Shoe

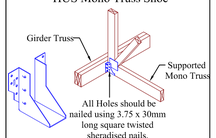

LUP Joist Hanger

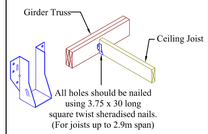

HGUS Girder Hanger

JHA Joist Hanger

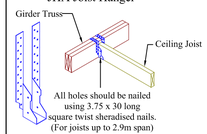

THG Girder Hanger

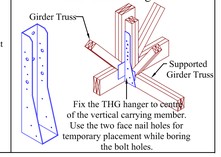

RD32: Roof Structure Ancillary Nailing

Supplier:	*Simpson Strong-Tie*				
Model No.	Description	Nailed to Truss		Nailed to Plate	
		No. of Nails	Type	No. of Nails	Type
TCP 38	Truss Clip 38mm	6	3.75x 30	6	3.75x 30
TCP 50	Truss Clip 50mm	6	3.75x 30	6	3.75x 30
A35	Framing Anchor	6	3.75x 30	6	3.75x 30
Model No.	Description	Nailed to Carrying Member/Support		Nailed to Carried Member	
		No. of Nails	Type	No. of Nails	Type
THA 250/38	Truss Shoe 38mm	24	3.75x 30	6	3.75x 75
THA 250/50	Truss Shoe 50mm	24	3.75x 30	6	3.75x 75
THA 250/75	Truss Shoe 75mm	24	3.75x 30	6	3.75x 75
THA 250/100	Truss Shoe 100mm	24	3.75x 30	6	3.75x 75
HUS 230/38	Heavy Mono Hanger 38mm	10	3.75x 30	6	3.75x 75
HUS 230/50	Heavy Mono Hanger 50mm	10	**3.75x 30**	6	3.75x 75
LUP 230/38	Speed Joist Hanger 38mm	6	**3.75x 30**	2	Prongs
LUP 230/50	Speed Joist Hanger 50mm	6	3.75x 30	2	Prongs
HGUS 145/80	Girder Truss Shoe 80mm	28	3.75x 75	10	3.75x 75
HGUS 145/105	Girder Truss Shoe 100mm	28	3.75x 75	10	3.75x 75
HGUS 145/120	Girder Truss Shoe 120mm	28	3.75x 75	10	3.75x 75
HGUS 145/155	Girder Truss Shoe155mm	28	3.75x 75	10	3.75x 75
JHA 270/38	Joist Hanger 38mm	22	3.75x 30	4	3.75x 75
JHA 270/50	Joist Hanger 50mm	22	3.75x 30	4	3.75x 75
JHA 270/75	Joist Hanger 75mm	22	3.75x 30	4	3.75x 75
JHA 270/100	Joist Hanger 100mm	22	3.75x 30	4	3.75x 75
JHA 450/38	Long Leg Joist Hanger 38mm	22	3.75x 30	6	3.75x 75
JHA 450/50	Long Leg Joist Hanger 50mm	22	3.75x 30	6	3.75x 75
JHA 450/75	Long Leg Joist Hanger 75mm	22	3.75x 30	6	3.75x 75
JHA 450/100	Long LegJoist Hanger 100mm	22	3.75x 30	6	3.75x 75
JHA 450/150	Long Leg Joist Hanger 150mm	22	3.75x 30	6	3.75x 75
NOTE:	3.75 x 30 Refers to 3.75mm x 30mm Square Twist Shank (Galvanised Coated) Nails				
	3.75 x 75 Refers to 3.75mm x 75mm Smooth Shank (Galvanised Coated) Nails				

RD33: Valley Board

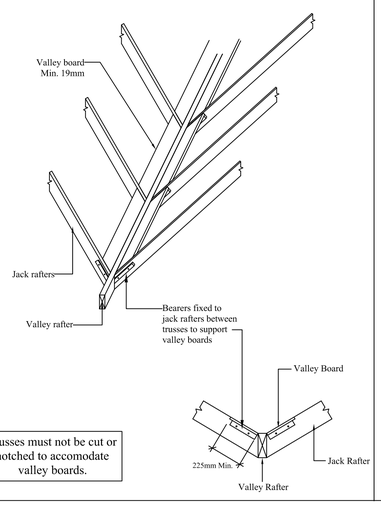

Trusses must not be cut or notched to accomodate valley boards.

RD34: Valley Layboard

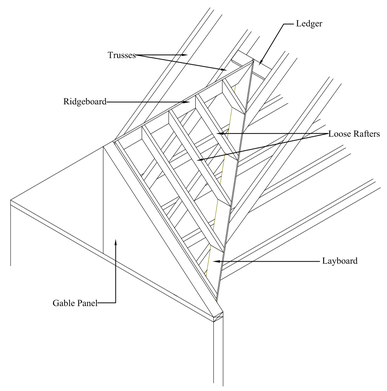

NOTE: ALL TIMBER SIZES TO BE INDVIDUALLY SPECIFIED FOR EACH APPLICATION.

RD35: Diagonal Rafter Brace

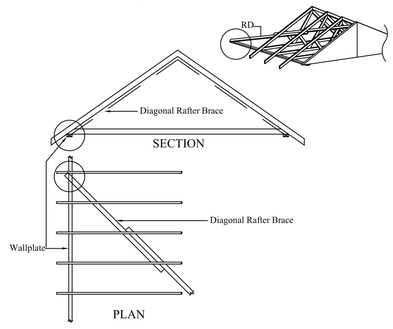

IF DIAGONAL BRACING CANNOT BE FITTED TO ACHIEVE THE ABOVE DETAIL, PLEASE CONTACT TAYLOR LANE IMMEDIATELY FOR DETAIL.

RD36: Truss Tolerances

Manufacture Tolerances:

Trusses up to 10m span should be manufactured within a tolerance +/- 10mm for overall horizontal and vertical dimensions.

For trusses over 10m span a tolerance of 1mm per m is permitted.

The overall dimensions of a batch of identical trusses should not differ by more than 10mm.

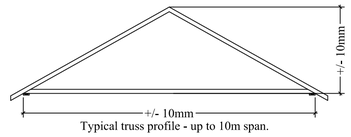

Typical truss profile - up to 10m span.

Erection Tolerances:

Trusses should be erected as close to vertical as possible. However some deviation is permitted, see below:

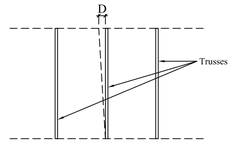

Overall Height of Truss (m)	1	2	3	4 or More
Max deviation from Vertical *D* (mm)	10	15	20	25

Rev	Description	Date

Drawing Status:

Construction

Title: Roof Standard Details

Drg No: Sheet 2

Client:

Site:

Scale at A1: NTS

Date: 12.06.09

Drawn by: DJ

Checked by:

Rev: -

TAYLOR LANE ©

Chapel Road, Rotherwas Industrial Estate, Hereford HR2 6LD
Tel: 01432 271912 Fax: 01432 351064 www.taylor-lane.co.uk
General Design Office E-mail: design@taylor-lane.co.uk